bürkert
FLUID CONTROL SYSTEMS

SE56 standard
with display in
stainless steel

SE56 basic

SE56 blind

Electronics for electromagnetic flowmeters

- Must be equipped with sensor fitting S051, S054, S055 or S056
- Continuous measurement or batch control
- High accuracy
- Data logger, PROFIBUS DP, HART available

Type SE56 must be combined with...

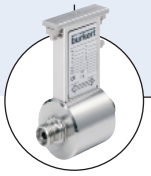

Type S051
Magnetic sensor fitting
- for low flow

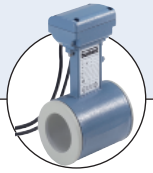

Type S054
Magnetic sensor fitting
- Wafer

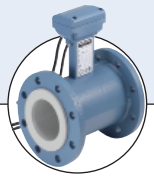

Type S055
Magnetic sensor fitting
- Flange

Type S056
Magnetic sensor fitting
- Hygienic

The electronics Type SE56 (blind in compact version or with display in compact or remote version) connected to the magnetic flow sensor fitting Type S051, S054, S055 or S056 is designed for applications with liquids with a minimum conductivity of 5 µS/cm.

The device can be parameterize either with 3 keypads (version with display) or by computer via a serial interface.

As standard, the equipment is supplied with one or two transistor outputs and one digital input. As options, other features are available: such as high frequency output, current output, data logger 2 MB, PROFIBUS DP, HART.

Accuracy diagram

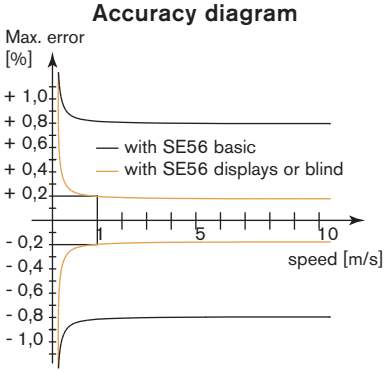

Technical data (electronics SE56 standard with local display)	
Compatibility	S051, S054, S055, S056 sensor (see separate data sheet 8051, 8054/8055, 8056)
Housing materials	Die casting aluminium or stainless steel 304 electro-polish
Display	Graphic display 8 lines x 16 Characters, 128x64 pixels with back light
Keyboard	3 membrane keys
Electrical connection	6 cable glands PG11

Medium temperature, please see separate data sheets of the complete magflowmeter 8051, 8054/8055, 8056

Environment	
Ambient temperature	
Operating and storage	-20°C to +60°C *(-4°F to 140°F)*
Relative humidity	≤ 85%, without condensation
Height above sea level	-200 m up to 6000 m

Standard	
Protection	Class I, IP67, category of installation II
Standard	
EMC	EN 61326-1
Emission	EN 55011 (Group1, Class B)
Immunity	IEC 1000-4-2/3/4/5/6/11
Safety	EN 61010

DTS 1000101308 EN Version: G Status: RL (released | freigegeben | validé) printed: 27.06.2011

Technical data (electronics SE56 standard with local display) - continued

Electrical data	
Power supply	90...265 V AC - 44 Hz up to 66 Hz
Power consumption	max. 25 VA
Cable length	max. 20 m (distance between sensor and transmitter)
Input circuit	1 digital, selectable function
Outputs	
Transistor	2 outputs, selectable open collector as pulse / frequency (1250 Hz, 100 mA, 40 V DC) or alarm (adjustable usage)
Current	1 output, 4...20 mA - RL = 1000 Ω (+ a second output)*
Serial interface*	RS 485, RS232, PROFIBUS DP or HART
Datalogger*	2 MB, 32 values + 64 alarm events
Velocity range	0.4 m/s ... 10 m/s

* on request.

Electrical data (continued)	
Measurements tolerance	Flow rate (volume) = ±0.05% of reading Out 4/20 mA = ±0.08% of reading Frequency out = ±0.08% of reading
Accuracy [1]	±0.2% of reading (see diagram, on page 1)
Repeatability	±0.1% of reading
Galvanic isolation	All the input/outputs are galvanically isolated from power supply
Data storage	An EEPROM stores the measured values (in case of power failure)
Special functions	Bidirectional measure Dual measurement range Diagnostic function Empty pipe detection Remote configuration (for connection to PC or hand terminal through remote configuration tool kit) Batch function

[1] under reference conditions: water temperature = 20°C, ambient temperature = 25°C, constant flow rate during the test, liquid speed > 1 m/s

Technical data (electronics SE56 blind)

General data	
Compatibility	S051, S054, S055, S056 sensor (see separate data sheet 8051, 8054/8055, 8056)
Materials	
Housing	Stainless steel
Cover	PPS
Seal	EPDM
Display	None
Parameterization	Through remote configuration tool kit (accessories Item No. 559 374)
Electrical connection	2 cable glands PG9

Medium temperature, please see separate data sheets of the complete magflowmeter 8051, 8054/8055, 8056

Electrical data	
Power supply	20...30 V DC
Power consumption	max. 10 W
Input	1 digital, selectable function
Outputs	
Transistor	2 outputs, selectable open collector as pulse / frequency (1250 Hz, 100 mA, 40 V DC) or alarm (adjustable usage)
Current	1 output, 4...20 mA - RL = 800 Ω passive
Serial interface*	RS 485 or PROFIBUS DP

* on request.

Electrical data (continued)	
Accuracy [1]	±0.2% of reading (see diagram, on page 1)
Repeatability	±0.1% of reading
Galvanic isolation	All the input/outputs are galvanically isolated from power supply
Data storage	An EEPROM stores the measured values (in case of power failure)
Special functions	Bidirectional measure Diagnostic function Empty pipe detection Remote configuration (for connection to PC or hand terminal) Batch function
Velocity range	0.4 m/s ... 10 m/s

Environment	
Ambient temperature	
Operating and storage	-20°C up to 40°C *(-4°F to 104°F)*
Relative humidity	≤ 85%, without condensation
Height above sea level	-200 m up to 6000 m

Standard	
Protection	Class I, IP67, category of installation II
Standard	
EMC	EN 61326-1
Emission	EN 55011 (Group1, Class B)
Immunity	IEC 1000-4-2/3/4/5/6/11
Safety	EN 61010

DTS 1000101308 EN Version: G Status: RL (released | freigegeben | validé) printed: 27.06.2011

Technical data (electronics SE56 basic)

General data	
Compatibility	S051, S054, S055, S056 sensor (see corresponding data sheet)
Materials Housing	 PA6 with glass fibre
Display	Alphanumeric display 2 lines x 16 Characters, without back light
Parameterization	Through remote configuration tool kit (accessories Item No. 559 374) or 3 keys inside
Electrical connection	3 cable glands PG11

Medium temperature, please see separate data sheets of the complete magflowmeter 8051, 8054/8055, 8056

Electrical data	
Power supply	90...265 V AC or 12...60 V DC
Power consumption	max. 6 W
Input	1 digital, selectable function
Outputs Transistor Current Serial interface*	 2 outputs, selectable open collector as pulse / frequency (1250 Hz, 100 mA, 40 V DC) or alarm (adjustable usage) 1 output, 4...20 mA - RL = 800 Ω passive RS 485

* on request.

Electrical data (continued)	
Measurements tolerance	Flow rate (volume) = ±0.1% of reading Out 4/20 mA = ±0.12% of reading Frequency out = ±0.12% of reading
Accuracy	±0.8% of reading (see diagram, on page 1)
Repeatability	±0.2% of reading
Galvanic isolation	All the input/outputs are galvanically isolated from power supply
Data storage	An EEPROM stores the measured values (in case of power failure)
Special function	Bidirectional measure Diagnostic function Empty pipe detection Plug in (protected plug for connection to PC or hand terminal)
FS value	0.4...10 m/s

Environment	
Ambient temperature Operating Storage	 -10°C up to 50°C *(14°F to 122°F)* -20°C up to 50°C *(-4°F to 122°F)*
Relative humidity	≤ 85%, without condensation
Height above sea level	-200 m up to 6000 m

Standard	
Protection	Class I, IP65, category of installation II
Standard EMI Safety	EN 55011 (Group1, Class B) EN 61326-1, IEC 1000-4-2/3/4/5/6/11 EN 61010

Dimensions [mm]

Electronics SE56 blind

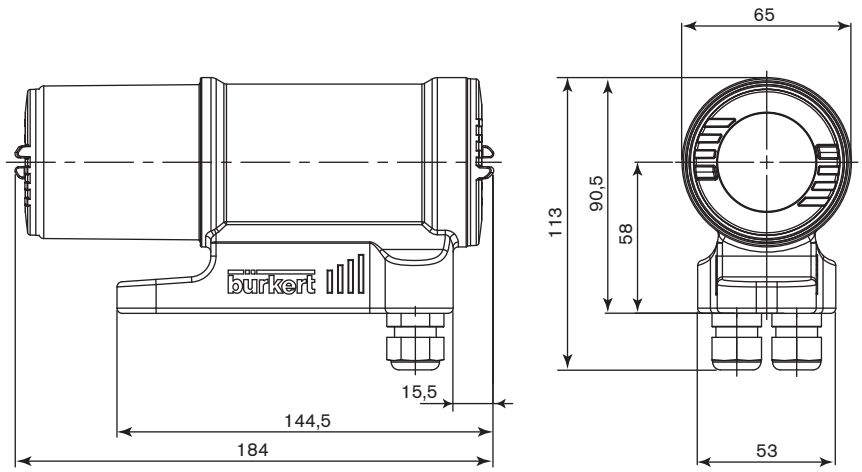

Dimensions [mm]

Electronics SE56 Basic

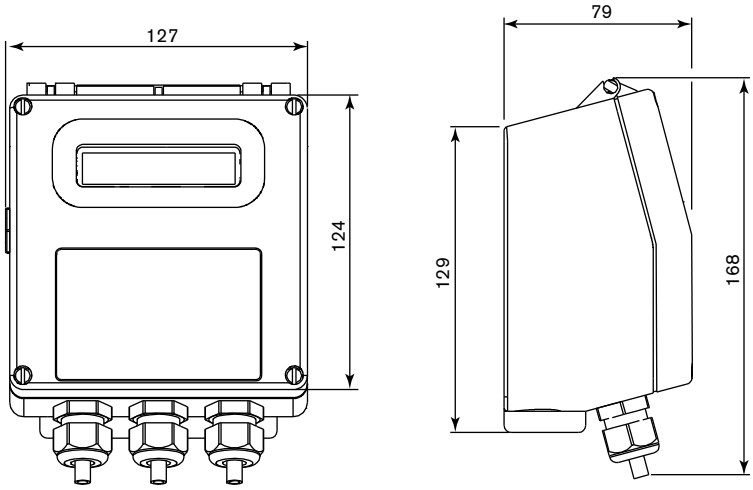

Electronics SE56 standard with local display

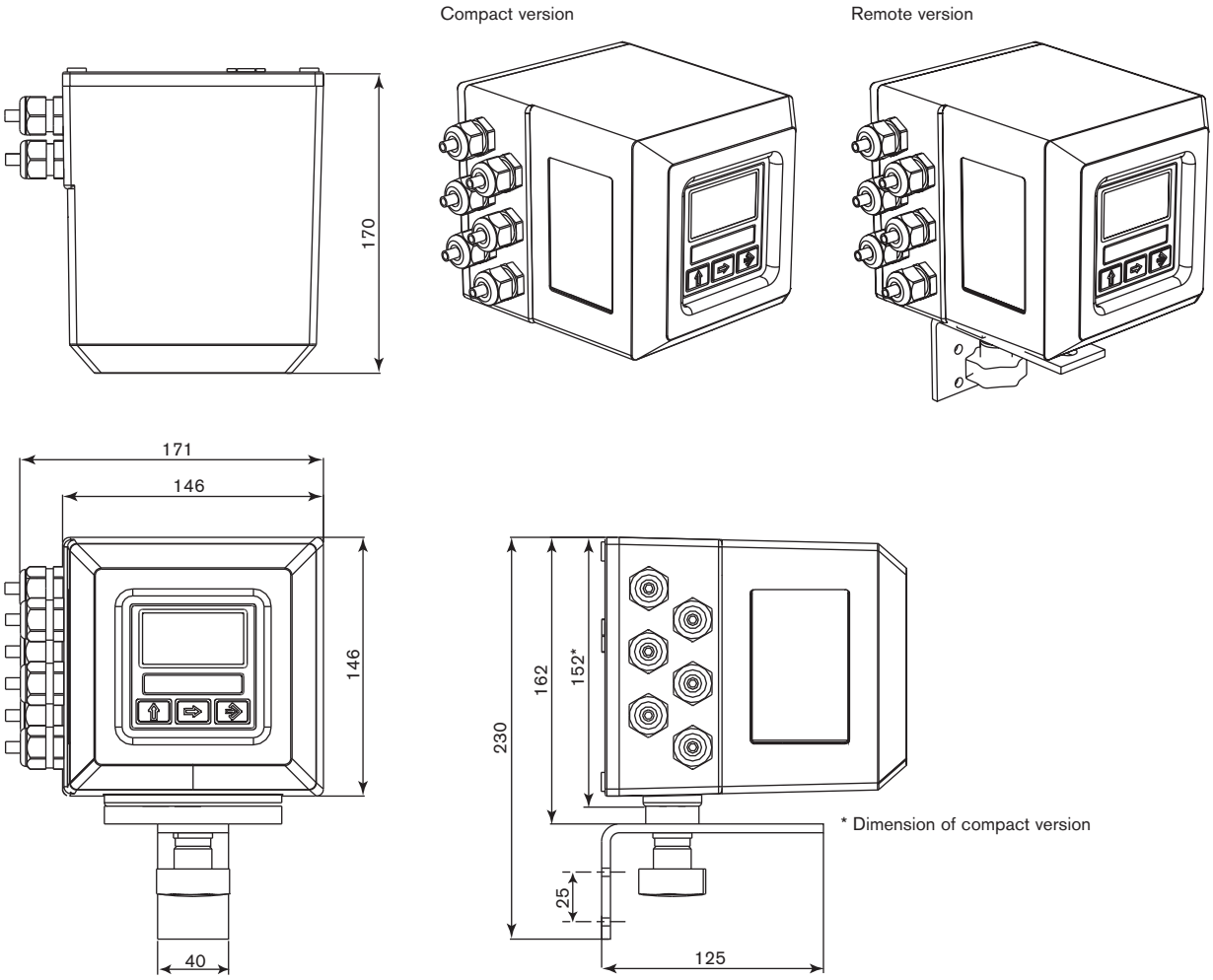

Ordering chart for electronics Type SE56 for magflowmeter

Description	Power supply	Output	Body material	Electrical connection	Item no.
Standard compact version with local display	90...265 V AC	2 transistors	Aluminium	6 cable glands	558 745
			Stainless steel	6 cable glands	559 780
		2 transistors + 4...20 mA	Aluminium	6 cable glands	558 747
			Stainless steel	6 cable glands	558 306
Standard wall-mounting version with local display	90...265 V AC	2 transistors	Aluminium	6 cable glands	559 781
			Stainless steel	6 cable glands	558 310
		2 transistors + 4...20 mA	Aluminium	6 cable glands	558 750
			Stainless steel	6 cable glands	558 308
Basic compact version with display	90...265 V AC	2 transistors	Nylon	3 cable glands	562 439
		2 transistors + 4...20 mA	Nylon	3 cable glands	562 440
	12...60 V DC	2 transistors	Nylon	3 cable glands	562 443
		2 transistors + 4...20 mA	Nylon	3 cable glands	562 444
Basic compact version without display	90...265 V AC	2 transistors	Nylon	3 cable glands	562 441
		2 transistors + 4...20 mA	Nylon	3 cable glands	562 442
	12...60 V DC	2 transistors	Nylon	3 cable glands	562 445
		2 transistors + 4...20 mA	Nylon	3 cable glands	562 446
Blind compact version	20...30 V DC	up to 4 transistors	Stainless steel	2 cable glands	559 132
		up to 4 transistors + 4...20 mA	Stainless steel	2 cable glands	559 133
		up to 4 transistors + PROFIBUS DP	Stainless steel	2 cable glands	559 134

i Further versions on request

Please also use the "request for quotation" form on page 7 for ordering a customized electronics go to page .

Ordering chart - spare parts/accessories

Electrical connection	Item no.
Remote configuration tool kit	559 374

Configuration accessories

Remote configuration tool kit

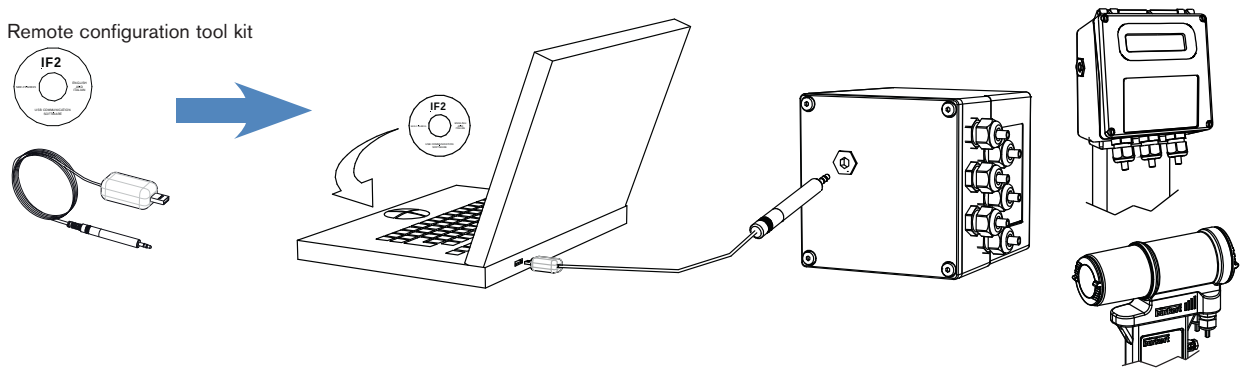

DTS 1000101308 EN Version: G Status: RL (released | freigegeben | validé) printed: 27.06.2011